IQBoard ET-D

User Manual

Copyright(C) 2003-2010 Fuzhou Returnstar Technology Co.,Ltd.

Web: www.recoverystar.com; www.iqboard.net
Tel: 0086-591-87274373
Fax: 0086-591-87274383
E-mail: master@recoverystar.com

Important Statements

This manual is for IQBoard ET-D.

The “Whiteboard” or “Interactive Whiteboard” in this manual all refer to IQBoard ET-D Electromagnetic Interactive Whiteboard. The “Electronic Pen” and “Electronic Pointer” are used for IQBoard ET-D.

Use this product strictly according to detailed operation instruction in this manual so as to ensure proper use. Before you install this product, please read this manual carefully to save your time.

Opening the package means you have agreed to purchase this product, Returnstar will not accept returns of opened packages.

The product specification may be subject to change without prior notice. The sample pictures in this User Manual may differ from the real product.

Returnstar reserves all rights to charge the fee at anytime for product replacement, revision and update. The content in this manual will be regularly revised without prior notice, and the printed manual will be updated when new version is released. Returnstar will make no guarantee for this product, both explicit and implicit, including the salability and the adaptability to certain purpose, and will deny all guarantees alike.

Copyright

Returnstar, IQBoard are registered trademarks of Fuzhou Returnstar Technology Co.,Ltd. Windows is a registered trademark of Microsoft.

Environment Protection

When discarding this electronic device, please don’t treat it as normal trash. To minimize the pollution and protect the environment, please recycle it.

Working Temperature and Humidity

Storage: Temperature: -40 degrees to 60 degrees; Humidity: 0% to 95%

Operation: Temperature: 0 degrees to 40 degrees; Humidity: 15% to 85%

Chapter 1 Product Introduction

IQBoard ET-D is the latest interactive presentation boards. Connect IQBoard ET-D with your computer and projector, then simply touch the projection area with electronic pen, you can transform the electronic pen to mouse and directly operate the computer on the projection area. Enable the “Dual-user” in IQBoard Software, you can simply write on the board with two pens simultaneously.

With IQBoard ET-D, marvelous interactive communicating effect can be achieved in various demonstrating and teaching situation, such as product exhibition, business conference, video communication, news broadcast, securities evaluation, military command, entertainment, medical consultation, engineering design, competition tactics analysis, weather analysis, etc.

IQBoard ET-D is provided with powerful IQBoard Software, which makes your operation on interactive whiteboard more convenient. Its powerful functions include writing, erasing, text editing, hand-writing recognition, on-screen keyboard, line, graph and table editing, graph recognition, video and sound playing, dimension and angle label, digital teaching tools, slide playing, operation review, dragging, revolving, hyperlink, reveal screen, spotlight, screen capture, screen record and replay, hand-writing saving in MS Office, page and file editing, printing and saving, etc.

IQBoard Software also includes 500M IQBoard Resource Library covering more than 30 subjects, such as math, physics, chemistry, biology, gymnasium, etc. User can customize the installation by selecting subjects. Also provide common line, shape, character, symbol, decoration graph, background template, Flash courseware, and other resources. Support importing various picture files and DOC, PPT, XLS files. The page and file created by IQBoard Software can be save as and freely converted to various picture files as well as DOC, PPT, XLS, PDF, HTML files, etc.

We provide continuous upgrading service for IQBoard Software. For more information and detailed operation about IQBoard Software, please refer to “IQBoard Software User Manual” in the installation CD.

Chapter 2 Specification

Performance: Effective resolution: 9600×9600, 300dpi; Signal tracking rate: 8m/s; Processing rate for writing or clicking: 480 dot/s. Provide 4, 9 or 20 points precise orientation. Power consumption for electronic pen: ≤1.5 W. IQBoard ET-D provides sizes of 80 inches, 90 inches, 100 inches,and customized sizes.

Hotkeys: Provide 28 hotkeys to achieve frequently used functions of IQBoard Software, 14 on each side of whiteboard surface or frame.

Prompt: *You can use either the physical hotkeys (hard hotkey) on each side of whiteboard frame, or the virtual hotkeys (soft hotkey) on each side of whiteboard surface. In the latter case, you need to you need to set these hotkeys at the first time you use the interactive whiteboard.*

Flexible fixing and relocating methods: Fixing methods include wall hanging, cabinets, and mobile stand. Provide optional height adjustable mobile stand for 50-120 inch whiteboards, the height can be adjusted from 1.88M to 2.12M.

Durable surface, solid body: The surface adopts dedicated writing film made of DuPont anti-abrasive coating. It features with anti-scratch, high luminance, high definition, easy cleaning (can be cleaned by whiteboard detergent or wet cloth), and can completely eliminate bright spots. The backboard, which is resistant to distortion, expansion and shrinkage, adopts PS board with high density. (Provide model supporting normal pen writing).

PC Connection: Provide 10M USB cable for connecting IQBoard with PC. External power is not required. Provide optional USB signal amplifier for 20M USB cable. Provide optional 2.4G radio frequency wireless module (Effective range: 10M).

Standard Configuration

IQBoard ET-D: interactive whiteboard, 2 electronic pens (include battery), 1 electronic pointer (optional), 1 10M USB cable, 1 wall hanging suit, 10 pen tips,1 driver CD (include the latest drivers and user manual), 1 IQBoard Software (include user manual) , 1 quality certificate, 1 warranty card.

About Models

AD080, AD100, AD120 refer to IQBoard ET-D in relevant sizes, with hotkeys and pen tray. B means wireless connection. N means hotkeys and pen tray is not included. W means board surface supports normal pen writing. For example, AD080LHBNWY means 80 inches IQBoard ET-D, adopting wireless connection, without hotkeys and

pen tray, and supporting normal pen writing.

System Requirement

Windows 2000/XP/2003/Vista32/7 32operation system
Pentium166 CPU (PentiumII or higher recommended)
64 MB RAM (128 MB recommended)
1G free hard disk space (for full installation)
1 free USB port
1 projector (short throw or ultra-short throw projector recommended)

Chapter 3 Install IQBoard

3.1 Mount Whiteboard

3.1.1 For product with an “M” on its name

In case your product has an “M” on its name, you can select wall mounting.

Parts list:

Picture	Name	Quantity
	Screw	4
	Wall Anchor	2
	Safety Bracket	2
	Anchor Bolt	2
	Wall Mounting Bracket (already mounted on the backboard)	2

Installation Steps:

Step 1. Determine the installation height of the Anchor Bolt (190cm above floor), then measure the horizontal distance (70cm±3mm usually) of the two holes on the wall mounting bracket according to the location of the whiteboard, (Prompt: You’d better take the actual horizontal distance of the two holes on the board you bought as standard.) then drill a hole at both ends, later, screw the two Anchor Bolts into the holes and leave 4mm clearance between bolt head and nut. (As shown in the Figure)

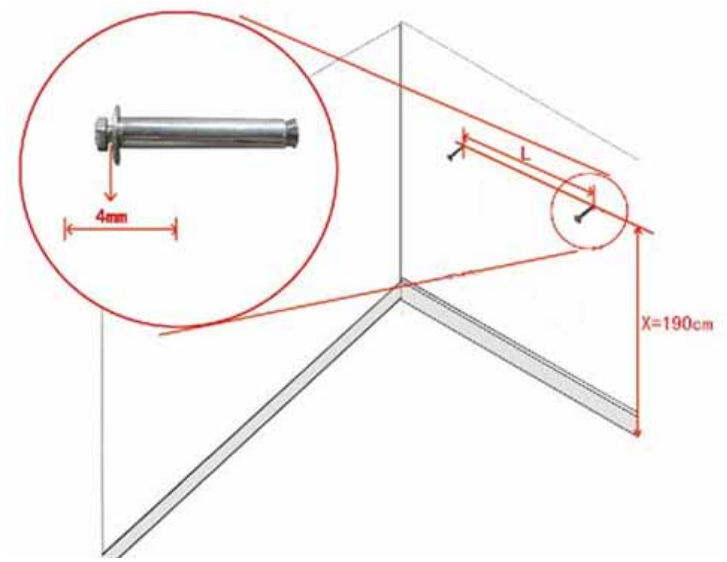

Step 2. Align the Wall Mounting Bracket on the backboard with the Anchor Bolts, and hang the whiteboard on the wall.

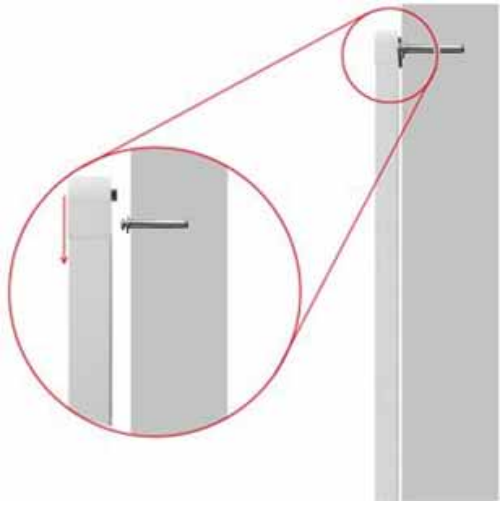

Step 3. Fasten the 2 Safety Brackets on each side of whiteboard lower frame using 2 Screws. According to the location of the Safety Brackets, drill 2 mounting holes on the wall. Finally use Wall Anchors and Screws to fix the Safety Brackets on the wall.

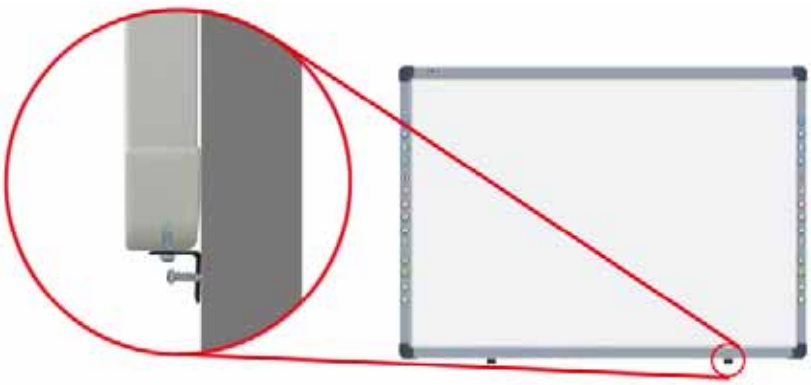

3.1.2 For product with a “Y” on its name

In case your product has a “Y” on its name, you can select either wall mounting or stand mounting.

Wall Mounting

Part list:

Picture	Name	Quantity
	Screw	4
	Wall Anchor	2
	Safety Bracket	2
	Anchor Bolt	4
	Height Adjustable Bracket (already mounted on backboard)	4

Installation Steps:

Step 1. Drill 4 holes at the location where you want to place the 4 Anchor Bolts, insert the 4 Anchor Bolts in these holes, and leave 4mm clearance between bolt head and nut for hanging whiteboard.

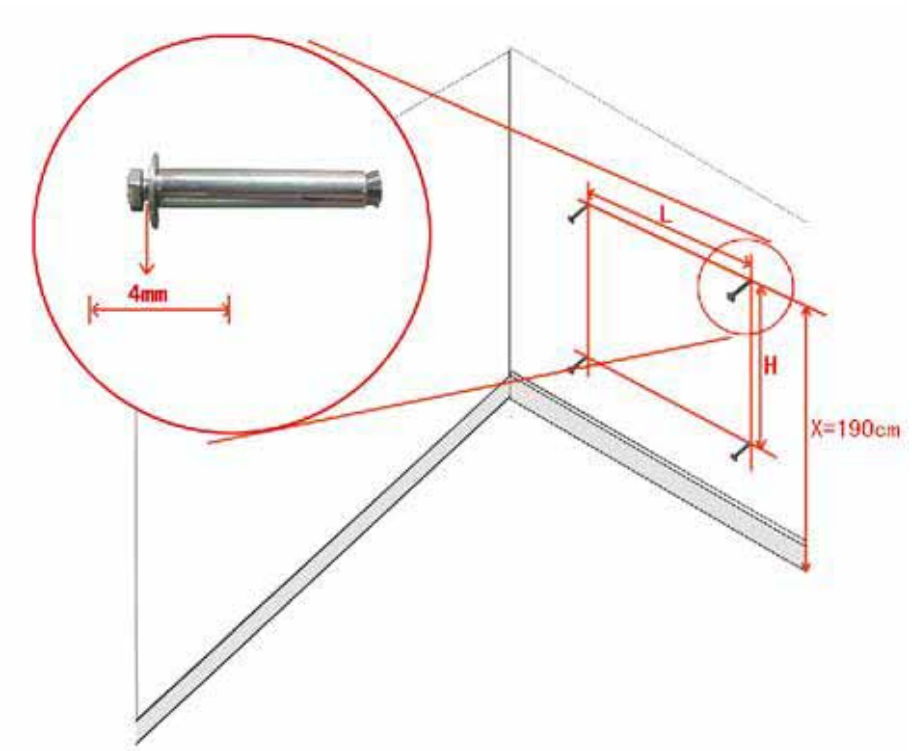

Prompt: *The distance from floor to the 2 anchor bolts on top (Distance X) is 190cm. The vertical distance between 2 anchor bolts (Distance H) is 75cm for the 80", 90" and 100" whiteboards. For the horizontal distance between 2 anchor bolts (Distance L), please measure horizontal distance of the 2 Height Adjustable Brackets on the backboard.*

Step 2. Align the Anchor Bolts with the clip holes of Height Adjustable Bracket on backboard, and then hang the whiteboard on the wall.

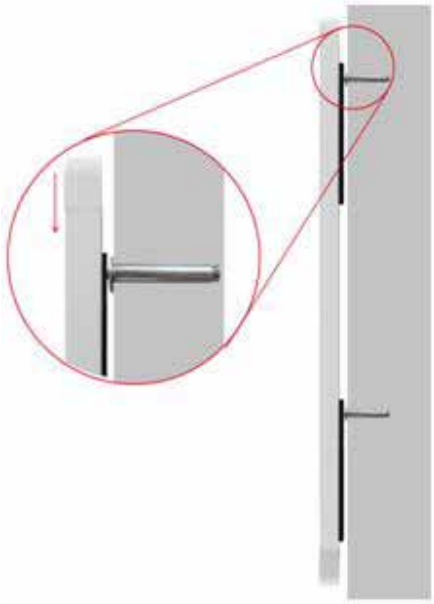

Step 3. Fasten the 2 Safety Brackets on each side of whiteboard lower frame using 2 Screws. According to the location of the Safety Brackets, drill 2 mounting holes on the wall. Finally use Wall Anchors and Screws to fix the Safety Brackets on the wall.

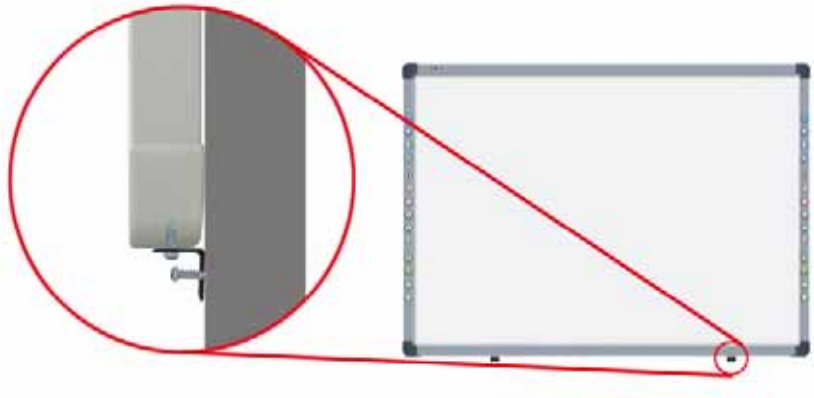

Stand Mounting

Part List

Picture	Name	Quantity
	Leg Bar	2
	Column	2
	Supporting Bar	2
	Caster	4
Provide customized longer crossbeam for whiteboard 100 inch.	Moveable Crossbeam (Each	2

	includes 2 Beams and a U-Shaped Groove)	
	Hexagon Bolt A	2
	Hexagon Bolt B (M8 × 50, with 08/22 washer)	4
	Hexagon Bolt C (M8×50)	8
Each set includes: 1 Hexagon Bolt, 1 Wind Nut, 1 M8 Nut, 1 Small Washer, 1 Big Washer	Hexagon Bolt Set A (M8× 50)	6
Each set includes: 1 Hexagon Bolt, 1 Wind Nut, 1 Small Washer, 1 Big Washer	Hexagon Bolt Set B (M8× 35)	4
	Anchor Bolt (M8×60)	4
	Wrench	1

Installation Steps:

Step 1. Install Column on each Leg Bar using Hexagon Bolt B.

Step 2. Install one end of each Supporting Bar on each Leg Bar, using Hexagon Bolt A.

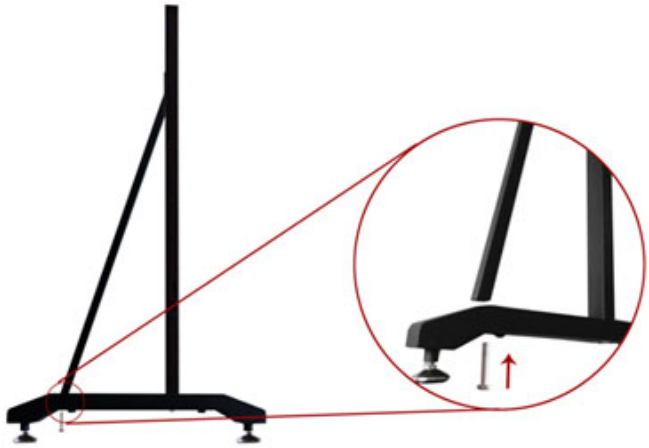

Step 3. Install the other end of each Supporting Bar on each Leg Bar, using Hexagon Bolt Set A. In this stage, please partially screw the bolt, leaving 4mm clearance between bolt head and column for hanging whiteboard.

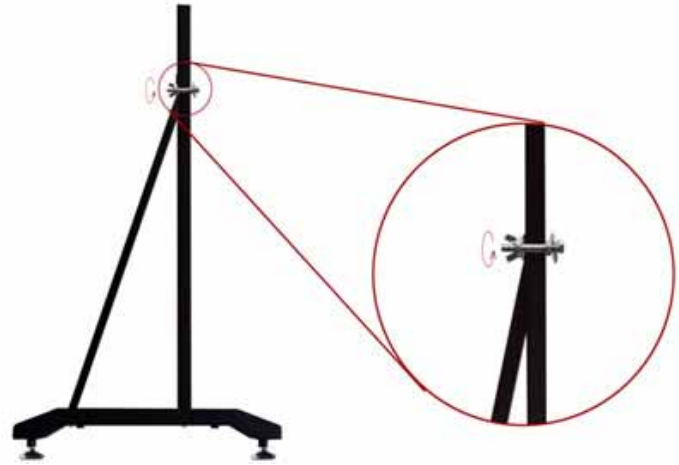

Step 4. Install 2 Casters on each Leg Bar.

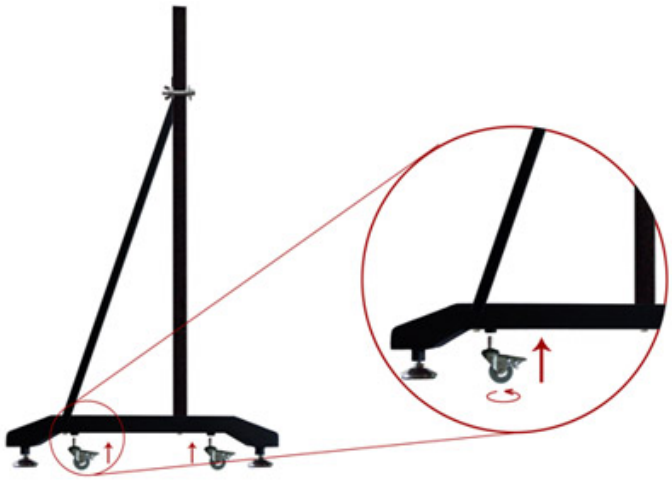

Step 5. Install 2 Beams on each Column, using Hexagon Bolt C

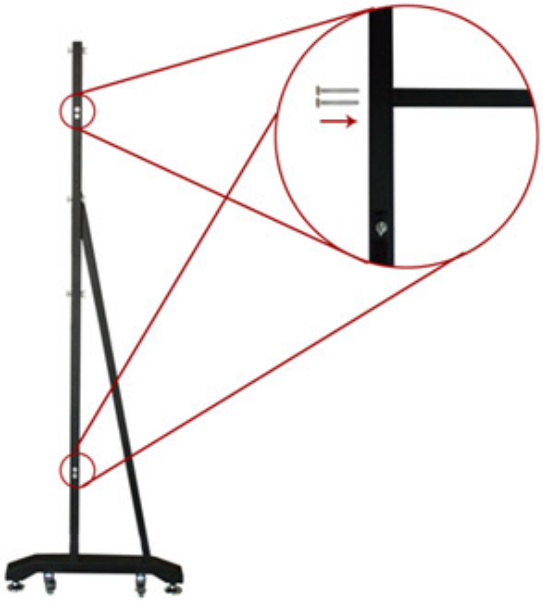

Step 6. Lay down and connect the two leg assemblies with the U-Shaped Grooves.

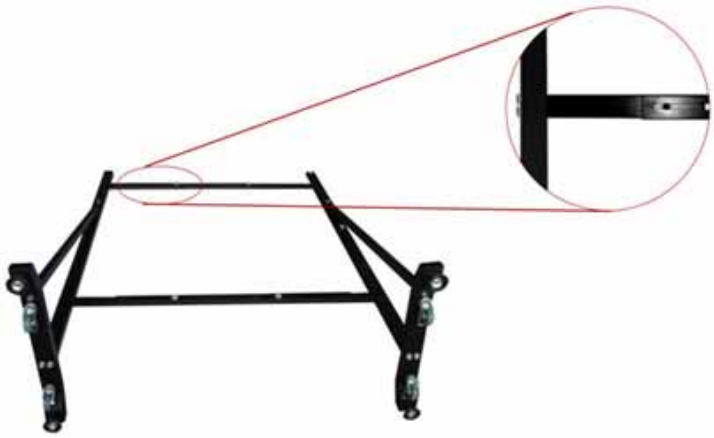

Step 7. Secure the U-Shaped Grooves with Hexagon Bolt Set B. In this stage, do not completely tighten the bolt in order to adjust the stand width later.

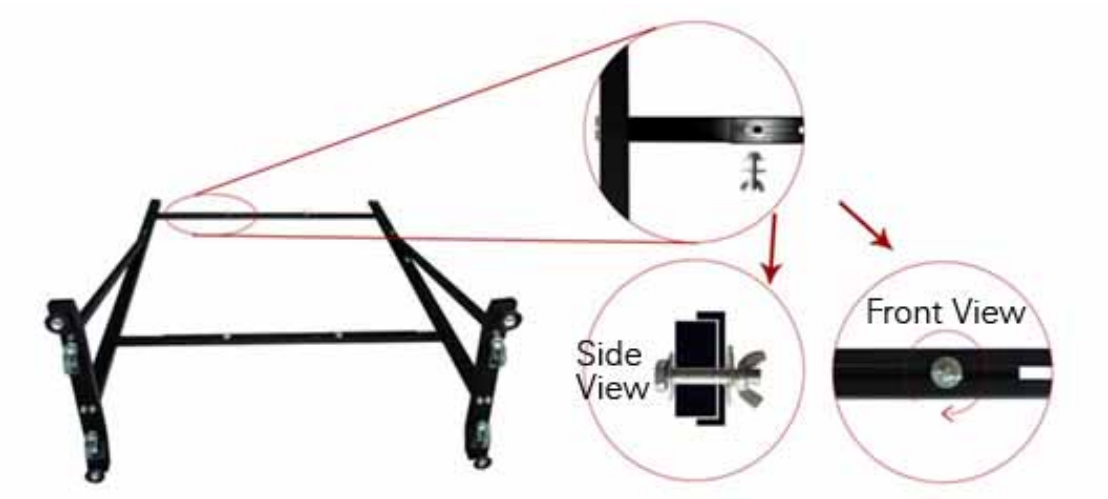

Step 8. Install 2 Hexagon Bolt Sets A on each Column, leaving 4mm clearance between bolt head and nut for hanging whiteboard.

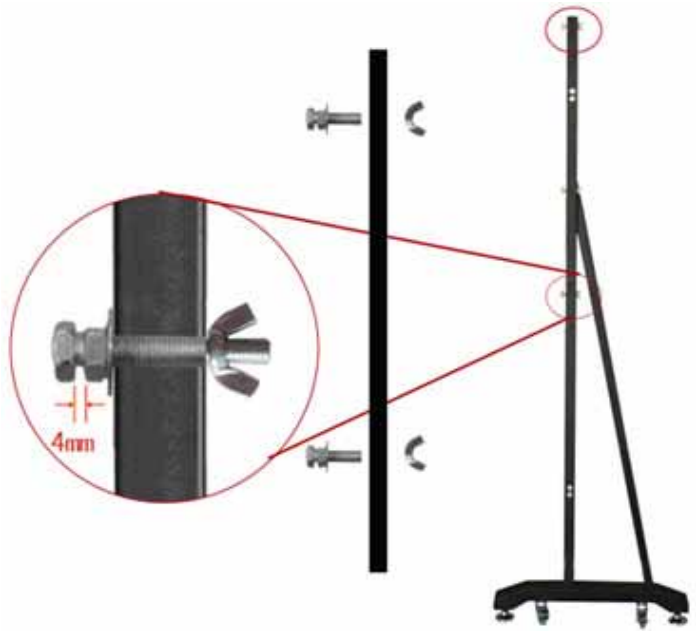

Step 9. Align the Hexagon Bolt on the Column with the clip holes of Height Adjustable Bracket on backboard, and hang the one side of whiteboard on the stand. Then adjust the stand width to fit the whiteboard, and hang other side of the whiteboard on the stand. Finally, tighten the bolts on the U-Shaped Groove and Columns. on Hexagon Bolts.

Prompt

1.You can use different clip holes of the Height Adjustable Bracket to adjust the whiteboard height. Generally the bottom of the whiteboard should be 70-80cm above the ground.

2.For 80, 90, and 100 inch whiteboard, you can hang the whiteboard on the first and third bolts from top down on the Column.

Fully assembled whiteboard is as follows:

3.2 Install Battery of Electronic Pen（the teacher pen and student pen）

1. Unscrew the battery cap by turning it counterclockwise.

2. Insert 1 AAA battery with the plus (+) side up.

3. Screw the battery cap back by turning it clockwise

3.3 Replace Pen Tip of Electronic Pen

1. Unscrew the pen tip cap by turning it counterclockwise.

2. Replace the pen tip by inserting its concave end into the pen body.

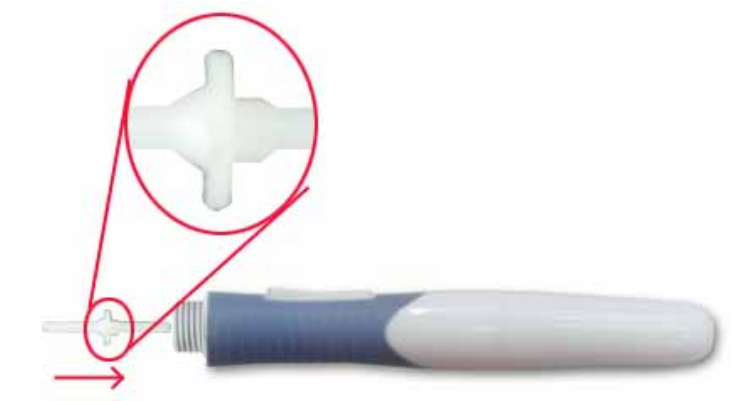

3. Screw the pen tip cap back by turning it clockwise.

3.4 Install Battery of Electronic Pointer

1. Gently lift the battery cover to open it.

Prompt: *Please gently open the battery cover to avoid damaging the connecting line.*

2. Insert 1 AAA battery with the plus (+) side up.

3. Close the battery cover.

Note: *If the electronic pen or electronic pointer will not be used for a long time, please remove the battery.*

Chapter 4 Connect IQBoard to Computer

After fixing the whiteboard, find a connecting port on the backboard right bottom. Plug the quadrate side of USB cable into the connecting port, and plug the flat side into the available USB port of computer, as follows. External power source is not required. And please connect the Projector into the VGA port of your PC video card.

Flat USB port for connecting the computer	Quadrate USB port for connecting whiteboard

If your product model is with “B” letter (refer to “About model” for detailed explanation for product model), you also can use wireless Bluetooth for PC connection, the connecting steps are as follows:

Step 1. After fixing the whiteboard, insert the round terminal of the 5V transformer into a round jack on the backboard right bottom, and insert the power plug of the 5V transformer into a power socket.

Note: *If your product model is with “N” letter (refer to “About model” for detailed explanation for product model), the round jack is on the right bottom of the backboard.*

Step 2. Plug the Bluetooth adapter into an available USB port of computer. And please connect the Projector into the VGA port of your PC video card.

Start the projector after connection, and adjust it to make its projection within the active area and centered. Then use the trapezoid rectification function of the projector to make the projection quadrate.

Maximum projection area for whiteboards without hotkey or with hard hotkeys

Maximum projection area for whiteboards with soft hotkeys

The blue areas are the maximum projection areas. For whiteboards without hotkey or with hard hotkeys, there should be 2cm margin between projection area and whiteboard inner frame. For whiteboards with soft hotkeys, the projection area should not exceed the hotkeys.

Note:

1. In case you use 16:9 whiteboard, please choose the projector supporting the 16:9 projection mode.

2. The projection image must be within the active area of the whiteboard, otherwise the whiteboard cannot work normally.

Chapter 5 Install and Uninstall Drivers

5.1 Install Drivers

Run “IQBoard ET-D & PS-D Drivers V1.0” in the installation CD, and install the drivers according to the prompt. The computer will automatically find a new hardware and install the drivers while you connect whiteboard to a computer for first time.

After the installation is completed, if the indicator beside the USB connecting port turns green, the whiteboard can be used normally. If the indicator turns red, it means the USB cable is not well connected, please re-connect the USB cable or restart computer. If the indicator is not lighting, it means the USB cable is not connected.

Indicator is not lighting	Indicator turns red	Indicator turns right
USB cable is not connected.	USB cable is not well connected, or the drivers are not correctly installed	The whiteboard works normally.

Prompt:

You can install the drivers under any Windows user account (Administrator, Guest, and Limited User).

5.2 Uninstall Drivers

Select “Start > Programs > IQBoard ET-D & PS-D Drivers V1.0 >Uninstall” to uninstall. You also can open Control Panel, select “Add/Remove Programs”, and in the list of Currently Installed Programs, select “IQBoard ET-D & PS-D Drivers V1.0”, then press the “Change/Remove” button to remove the drivers.

Chapter 6 Setup IQBoard

6.1 Orient IQBoard

At the first time you use the IQBoard ET-D Electromagnetic interactive whiteboard, you need to orient it, so the moving track of the electronic pen can match the cursor. You can select 4 points, 9 points or 20 points orientation. Normally 9 points orientation is adopted. After the whiteboard is oriented, you don't need to re-orient at the same environment.

To orient the whiteboard

1. Do one of the followings:

   Select "Start > Programs > IQBoard ET-D & PS-D Drivers >Orient"

   If your whiteboard includes hotkeys, press " " in the hotkey bar, then the 9 points orientation interface will appear.

The Orient Precision Selection window appears.

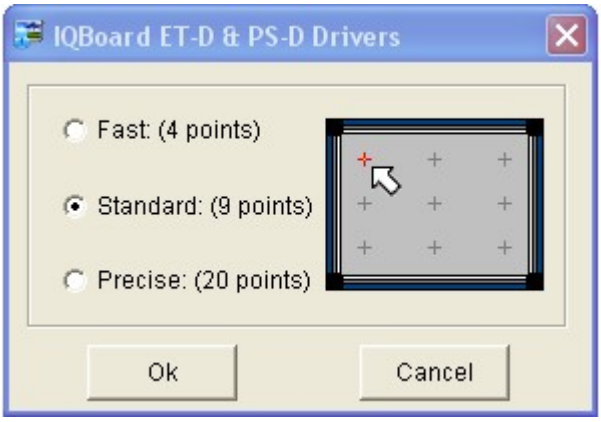

2. Select Orientation Points and click *"Ok"*, the orientation interface appears.

3. Do one of the followings:

   If you use pen, follow the on-screen instructions, press the center of each cross accurately with pen tip.

   If you use electronic pointer, follow the on-screen instructions, press the center of each cross accurately with pointer tip and press the button on the pointer body.

Your whiteboard is now oriented.

Prompt:

1. If you did not locate the accurate central point or clicked the wrong point, or the next fixed point appeared without press, please press "ESC" on the keyboard to exit this orientation and re-orient. Otherwise you can't operate the whiteboard accurately.
2. Please make your electronic pen or writing pen upright when orienting.
3. Either the teacher pen or the student pen can be used to orient the board.
4. In case the relative position of the whiteboard and projector is changed, or the driver or the monitor resolution is altered, please re-orient.

6.2 Setup Hotkey

At the first time you use the whiteboard with soft hotkeys, you need to set these hotkeys.

Step 1. Select "Start > Programs > IQBoard ET-D & PS-D Drivers >Hotkey setting" to enter the setting window, as follows

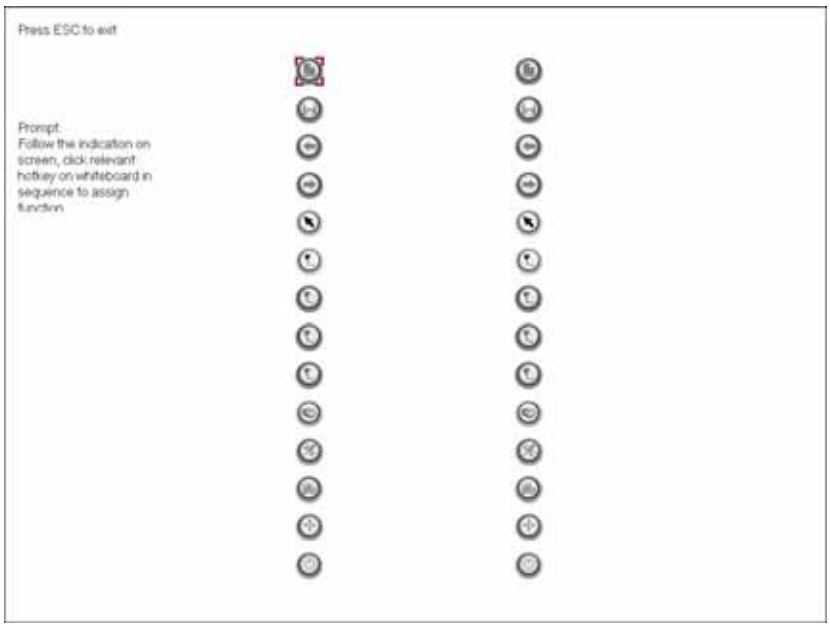

Step 2. Follow the indication on screen, click relevant hotkey in sequence. After the setting is completed, you can use these hotkeys.

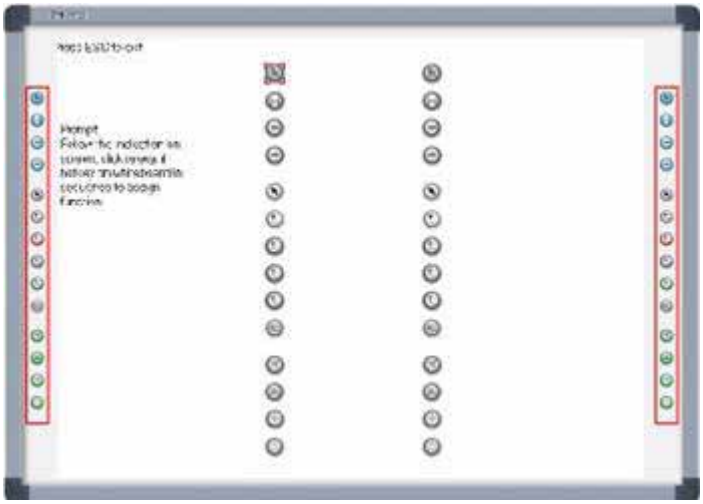

Prompt:

1. When setting the soft hotkeys, if some error occurs, you can press "ESC" key on the keyboard to exit the setting process, and then reset the hotkeys.

2. You don't need to set the hard hotkeys.

Chapter 7 Use IQBoard

7.1 Basic Operations

Single-click

If you use pen, press the surface with pen tip at proper strength.

If you use electronic pointer, touch the surface with the electronic pointer tip, then press the interactive button on the pointer body.

Double-click

If you use pen, press the surface twice with pen tip at proper strength. Please make sure you press at the same point.

If you use electronic pointer, touch the surface with the electronic pointer tip, then press the interactive button on the pointer body.

Right-click

If you use pen, press the surface with pen tip, and hold for 2 seconds to popup the right-key menu.

If you use electronic pointer, touch the surface with the electronic pointer tip, then press the interactive button and hold for 2 seconds on the pointer body.

.

Drag

If you use pen, press an object with pen tip and hold, then move the pen tip to drag the object to the desired position.

If you use electronic pointer, press the object with pointer tip, then press and hold down the button on the pointer body, and move the pointer tip to drag the object to the desired position.

Write:

If you use pen, start IQBoard Software, select a drawing tool, then you can write or draw by pressing the surface with pen tip.

If you use electronic pointer, start IQBoard Software, select a drawing tool, then you

can write or draw by pressing the surface with pointer tip, and pressing and holding the button on the pointer body.

7.2 Use Interactive Buttons on the teacher Pen

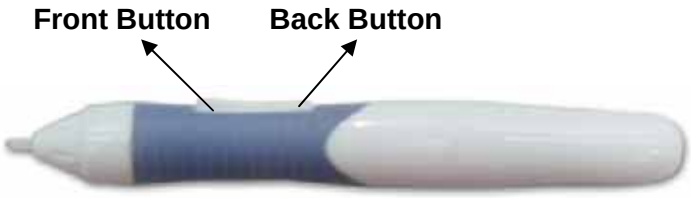

The teacher pen of IQBoard ET-D has 2 multi-functional interactive buttons. You can achieve dozens of functions by simply pressing the interactive buttons. Following are the operations of these interactive buttons. When using these buttons, please touch the whiteboard surface gently with pen tip. Do not press the surface.

When in Windows Mode

Front Button:

Press the button once to execute left-click function.

Back Button:

Press the button once to execute right-click function.
If IQBoard Software is not started, press the button twice to start IQBoard Software.

When in Board Mode, annotating on desktop, dual-user mode, playing page, or reviewing operation

Front Button:

If the “Select” function is not activated, press the button once to use the “Select” function.
If the “Select” function is not activated, press the button twice to use the “Move Page” function.
If the “Select” function is activated, press the button once to execute left-click function.

Back Button:

If no Freehand Drawing Tool is selected, press the button once to select a Freehand Drawing Tool.
If no Freehand Drawing Tool or Eraser is selected, press the button twice to select an

Eraser.
If any Freehand Drawing Tool is selected, press the button once to select an Eraser.
If any Eraser is selected, press the button once to select a Freehand Drawing Tool.

Prompt:

1. The student pen does not have the multi-functional interactive buttons.

2. To know the details of the above mentioned modes and status, please refer to IQBoard Software user manual.

3. When you press the Back Button to select a Freehand Drawing Tool or an Eraser, the default Free Hand Drawing tool is Pencil, and the default Eraser is Normal Eraser. If you have selected other Freehand Drawing Tool or Eraser before, IQBoard Software will use your previous selections.

7.3 Use Hotkeys on whiteboard

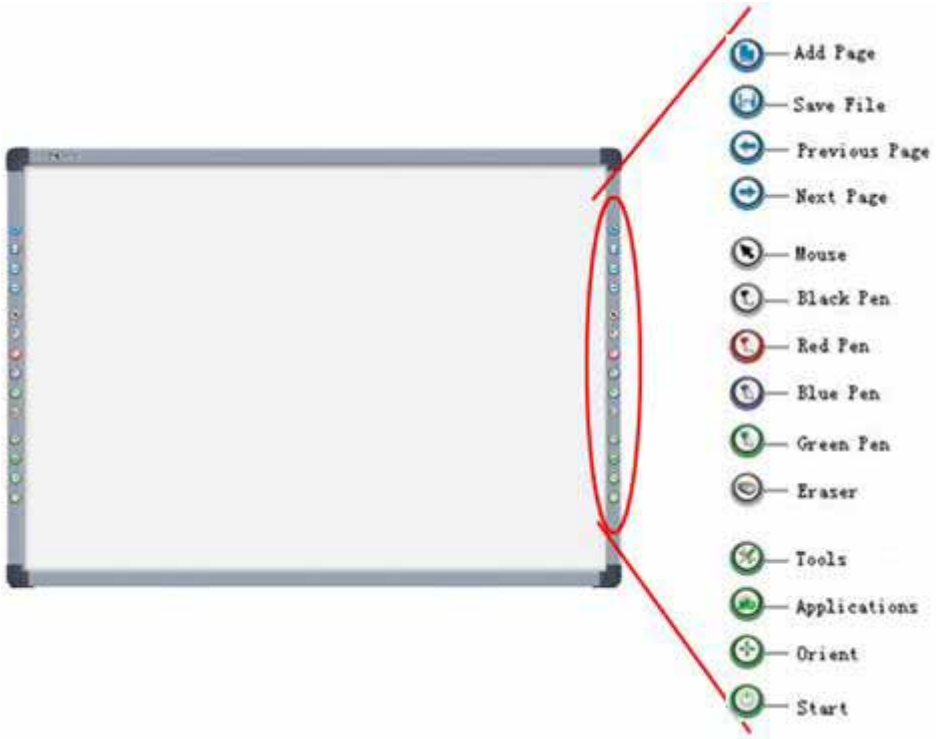

Following is the introduction of these hotkeys.

Add Page: In Windows Mode, press this key to clear all annotations on screen. In Board Mode, Press this key to add a new page in current “cdf” file.

Save File: In Windows Mode, press this key to save all annotations on screen to a page in current file. In Board Mode, press this key to save the current “cdf” file.

Previous Page: Press this key to go to the previous page.

Next Page: Press this key to go to the next page.

Mouse: Press this key, you can use electronic pen to achieve click, double-click, and drag function. When using IQBoard Software, press this key to switch between “Windows” and “Board” mode.

Pen: There are four “*Pen*” keys in different colors on the hotkey bar. Press one of these keys, you can write on board in corresponding color. Press “*Pen*” twice to modify its properties.

Eraser: Press this key, you can erase the writing content on board. In “Windows” mode, press this key twice to popup the “Shut Down Windows” window.

Tools: Press this key to popup a quick access bar including shortcut icons for frequently used tools in IQBoard Software. You can add up to 8 shortcut icons in this bar.

Applications: Press this key to popup a quick access bar including shortcut icons for frequently used applications. You can add up to 8 shortcut icons in this bar.

Start: Press this key to start the IQBoard Software.

Orient: Press this key to popup the 9 points orientation interface.

Prompt:

1. Except the “Start” and “Orient” keys, all hotkeys are functional only after IQBoard Software is started.

2. The functions of “Frequently Used Tools”, “Frequently Used Applications”, “Orient” can be opened or closed by pressing the relevant hotkeys on the hotkey bar.

3. In dual-user mode, the left hard key is the teacher hard key, and another side is the student hard key. Mouse, pen, eraser, tools, applications and orientation are available in the left hard key; Mouse, pen tools and eraser are available in the right hard key.

Chapter 8 FAQ

1. The whiteboard indicator is not lighting or turns red. The hotkey is not functioning.

1. The USB cable is not well connected with whiteboard or computer, please check and re-connect.

2. The USB port is damaged, please try another one. In case you are using desktop computer, please use its rear USB port.

3. If you use wireless connection, please make sure you have inserted the round terminal of the 5V transformer into a round jack on the right side of pen tray, inserted the power plug of the 5V transformer into a power socket, and well connected the Bluetooth adapter and computer with USB cable.

4. IQBoard ET-D Drivers haven't been correctly installed. Please uninstall the driver, restart computer, and re-install the driver. After the installation is completed, please reconnect the USB cable with computer.

5. IQBoard Software hasn't been started, please start IQBoard Software first.

2. What kind of orientation precision should I select?

It depends on your requirement of orientation time and accuracy. You have the following choices:

Quick orientation (4 points): for fast orientation

Standard orientation (9 points): for most of situations

Precise orientation (20 points): for high-definition system

3. When operating and writing on the whiteboard, the position of pen or finger doesn't match the position of cursor.

1. The relevant location of projector and white has been changed. Please re-orient the whiteboard.

2. The projection area has trapezoid distortion, please adjust the projection area, and re-orient the whiteboard.

3. When orienting the whiteboard, the pen is not perpendicular to the surface, please

re-orient with correct posture.

4. When orienting the whiteboard, the pen tip missed the green center of the red orienting cross, please re-orient the whiteboard.

4. When operating and writing on the whiteboard, the system response is slow, or the stroke is Intermittent.

The computer is not under normal running or the memory is occupied too much. Please close some applications or restart the computer.

The operating or writing force is uneven. Sometimes the force is too light to be sensed.

5. When I operate and write on the IQBoard ET-D with electronic pen, the system doesn't respond.

1. The electronic pen runs out of battery, please replace the battery.

2. The body of electronic pen is loose, please tighten it.

3. Please check whether the whiteboard indicator is green, if not, please refer to the solution of Question 1.

6. When using IQBoard ET-D, the cursor is out of gear or the whiteboard can't be oriented.

There is interference source nearby, such as high voltage cable or large generator set which can generate strong magnetic field.

Background knowledge: IQBoard ET-D adopts working principle of electromagnetic induction. So if there is interference source that can generate strong magnetic field nearby, the above symptom will occur. In normal condition, devices like cell phone, display, TV won't affect IQBoard ET-D. In case the interfering magnetic field is too strong, you can move either the interference source or IQBoard ET-D to keep their distance over 50cm.

7. The pen tip worn out.

Common abrasion will not affect normal operation. When the pen point is severely abraded, you can purchase it from local dealer.

Chapter 9 Cautions and Maintenance

9.1 Whiteboard

For the interactive whiteboard that do not support normal marker (the product model is without “W”), please try not to use normal marker to write on the surface. Before cleaning, please shut down the computer and switch the projector into standby mode to make the dirt more obvious. In case of normal dirt, spray some water or detergent on the surface, then use the paper to wipe the dirt out. If you leave some ink trail by mistakenly using the fountain pen, please buy some special whiteboard detergent and spray it on the soft cloth to clean to surface. For cleaning the mark left by the permanent marker, first paint some ink of dry erase marker on the mark (the ink of dry erase marker can dissolve the ink of permanent marker), then use soft cloth to clean. If the mark still exists, spay some whiteboard detergent, and clean it out.

Note: *Please do not use other organic solvent for cleaning. Otherwise it may permanently damage the surface.*

2. For the interactive whiteboard that support normal marker, you can use normal whiteboard eraser and wet cloth to clean.

Prompt: *Clean the frequently used whiteboard once a week to keep the best definition.*

3. Please do not use sharp or pointed objects to scratch the surface and frame, otherwise the scratched part may be damaged, and won’t work normally. During the usage, do not knock the surface fiercely to avoid the damage of whiteboard surface and electronic pen. You can use sand wax to eliminate the scratch on the surface, and use dry cloth to clean out.

4. Since the mobile stand (or the wall hanging parts) is designed only to support the weight of the whiteboard, please do not put the additional weight or pressure on the whiteboard. Please keep the whiteboard away from intense collision, shaking, pressing and do not install it by force, otherwise it may cause cracking, short circuit and surface distortion.

5. Please do not use and install interactive whiteboard in dusty, foggy, wet and inclement environment. Keep it away from sharp object, heat source, corrosive chemicals, fire, and water. Please do not put the whiteboard in the outlet of hot air, otherwise the material will deteriorate and its life-span will be shortened.

6. To avoid harm from improper operation, please do not use chair or other tool to help short students use the whiteboard. If students can not use whiteboard because of the limitation of their height, please low down the whiteboard under the help of professional technician.

9.2 USB Cable

Do not put the USB cables on the floor where it may stumble others. If you have to do so, straighten them and use insulated adhesive tape or cable with contrast color to tie them up. Please handle carefully and avoid over-bending. Exposing the USB cable outside for a long time may shorten its life-span and cause other unnecessary damages, so please keep it carefully. If you use the whiteboard in the meeting room or class room, please fix the cable according to the cable alley.

Note: *Since the USB cable and port are made in special specification, please do not use other USB cable and port for replacement.*

9.3 Projection

Face the whiteboard when operating and writing on the projected image, stand aside when you turn back to face the students. Please do not look at the projector directly to avoid its strong light damaging your eyesight. Instruct students how to use the whiteboard, tell them not to face the projector directly.

9.4 Transport

Please handle with care, and do not put any weight on the surface so as to avoid the surface distortion and damage. Lay the whiteboard upright during the transportation or storage. In long distant transportation, it is suggested to repack the whiteboard with the original packing. If the original packing is unavailable, insert some protective padding between the components to protect them from intense vibration or crash. Avoid vibration, dampness, electricity, water and pressure in transportation.

9.5 Part Replacement

Please do not disassemble the whiteboard or modify its inner structure so as to prevent accident or trouble. For maintenance or part replacement, please resort to our authorized technician. Make sure that you use our designated part or the one with same specification when replacing.